sales@murada.co.id
www.murada.co.id

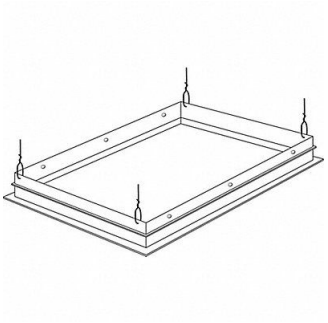

LITHONIA LIGHTING Drywall Grid Adapter Kit 2 ft x 2 ft, 1THV4

Item **14CPP1738** Mfr. Model **DGA22**

Product Details

Item Reference: **1THV4**	Width (in): **5.1**
Brand: **LITHONIA LIGHTING**	Height (in): **2.5**
Weight (lb): **2.28**	Harmonization Code: **9405994090**
Length (in): **28.8**	

Product Description

For Use With Any 2 ft x 2 ft Grid Troffer (Overall Trim 25 3/8 in W x 25 3/8 in L) 2 ft x 2 ft 24 3/4 in Overall Length Acrylic Unfinished Finish White