sales@murada.co.id
www.murada.co.id

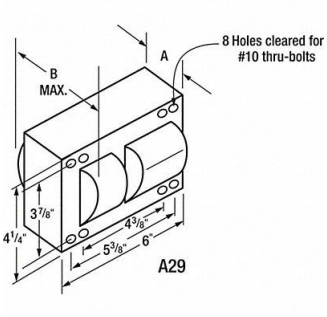


# ADVANCE HID Ballast Kit Probe Start MH 1000W, 1A030

Item **14YZY0196** Mfr. Model **71A6572001**

## Product Details

| | |
|---|---|
| Item Reference: **1A030** | Width (in): **9.1** |
| Brand: **ADVANCE** | Height (in): **7.7** |
| Weight (lb): **22.2** | Harmonization Code: **8504100000** |
| Length (in): **4.7** | |

## Product Description

Advance Magnetic HID Ballast Kit Ballast Start Type Probe ANSI Code M47 Metal Halide Ballast Bulb Type Number of Bulbs Supported 1 Max Bulb Watts 1 000 W Input Voltage 120 to 277V AC Input Watts 1 080 W -20 Degrees F Min Starting Temp Ballast Factor 1 Frequency 60 Hz