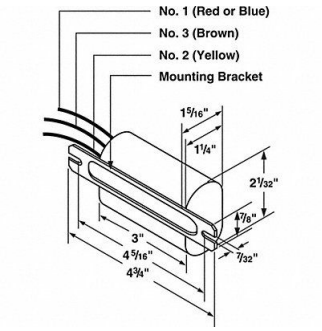

ADVANCE Ballast Ignitor 2-3/16 Dia 1000W HPS, 1N118

Item **14YZY0185** Mfr. Model **LI571J5IC**

Product Details

Item Reference: **1N118**	Width (in): **2.8**
Brand: **ADVANCE**	Height (in): **1.8**
Weight (lb): **0.8**	Harmonization Code: **8536509065**
Length (in): **7.5**	

Product Description

Val-U-Pak Plus (77L) Ballast Ignitor High Pressure Sodium Ballast Bulb Type Max Bulb Watts 1 000 W Max Distance to Bulb 75 ft Number of Bulbs Supported 1 2 3/16 in Diameter 4 3/4 in Length