sales@murada.co.id
www.murada.co.id

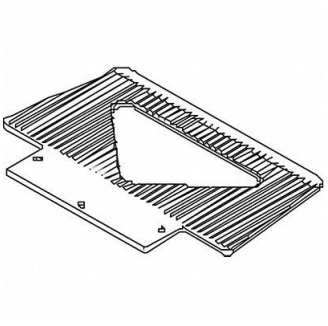

WESCO Nose Plate 14 W 7 D 350 lb., 15J307

Item **17XCD25797** Mfr. Model **274169**

Product Details

Item Reference: **15J307**	Width (in): **15**
Brand: **WESCO**	Height (in): **10**
Weight (lb): **2.2**	Harmonization Code: **8716905060**
Length (in): **25**	

Product Description

Hand Truck Nose Plate Load Capacity 350 lb Nose Plate Width 14 in Nose Plate Depth 7 in Nose Plate Type Open Straight Nose Plate Material Aluminum Nose Plate Profile Beveled Overall Depth 7 in Overall Width 14 in