sales@murada.co.id
www.murada.co.id

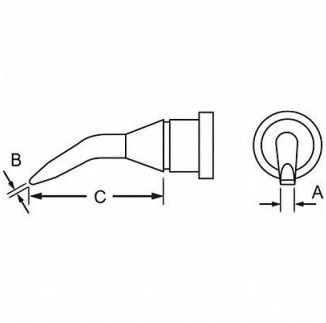

WELLER LT Bent Chisel Soldering Tip, 24AC58

Item **33MNS6439** Mfr. Model **T0054442899**

Product Details

Item Reference: **24AC58**	Width (in): **0.7**
Brand: **WELLER**	Height (in): **0.7**
Weight (lb): **0.01**	Harmonization Code: **8515904000**
Length (in): **2**	

Product Description

Soldering Tip Tip Type Bent Chisel Tip Width 1.2 mm Tip Length 16.5 mm Maximum Operating Temperature 850 Degrees F Compatible Handpiece Manufacturer Model Number WP 80 WSP 80 WSP 80N WXP 80 Tip Outside Diameter 4.6 mm Tip Thickness 0.4 mm Tip Angle 30 Degrees Compatible Station WD1002 WD1002T WR2000VX WR3000M WR3000SA WR3000SS WR3000TA WT1012 WT1013 WT1013N Compatible Handpiece Manufacturer Weller Application Soldering ESD Safe No Material Iron Plated Copper