sales@murada.co.id
www.murada.co.id

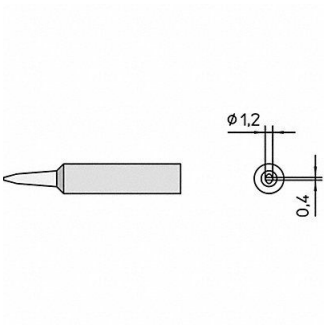

WELLER XNT Chisel Soldering Tip, 20UY12

Item **33MNS6436** Mfr. Model **T0054486099**

Product Details

Item Reference: **20UY12**	Width (in): **3.936**
Brand: **WELLER**	Height (in): **0.236**
Weight (lb): **0.005**	Harmonization Code: **8515904000**
Length (in): **4.724**	

Product Description

Soldering Tip Tip Series XNT Tip Type Chisel Tip Width 1.2 mm Tip Length 28 mm Maximum Operating Temperature 850 Degrees F Compatible Handpiece Manufacturer Model Number WP 65 WTP 90 WXP 65 WXP 90 Tip Outside Diameter 4.75 mm Tip Thickness 0.4 mm Compatible Station WT1010N WX1012 WX1012N WXR3001 WXR3001N WXR3003 WXR3003N Compatible Handpiece Manufacturer Weller Application Soldering ESD Safe No Product Type Soldering Tip