sales@murada.co.id
www.murada.co.id

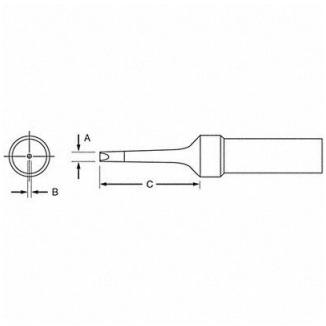

WELLER ET Chisel Soldering Tip, 20UX49

Item **33MNS6398** Mfr. Model **ETR**

Product Details

Item Reference: **20UX49**	Width (in): **1**
Brand: **WELLER**	Height (in): **0.06**
Weight (lb): **0.01**	Harmonization Code: **8515904000**
Length (in): **3.2**	

Product Description

Soldering Tip Tip Series ET Tip Type Chisel Tip Width 1.6 mm Tip Length 34.5 mm Maximum Operating Temperature 850 Degrees F Compatible Handpiece Manufacturer Model Number EC1201A EC1204A PES50 PES51 WCC101 WEP 70 Tip Outside Diameter 6.8 mm Tip Thickness 0.7 mm Compatible Station WD1 WD2 WE1010 WE1010EDU WE1010NA WES50 WES51 WES51PU WESD51PU Compatible Handpiece Manufacturer Weller Application Soldering ESD Safe No Material Plated Copper Product Type Soldering Tip