sales@murada.co.id
www.murada.co.id

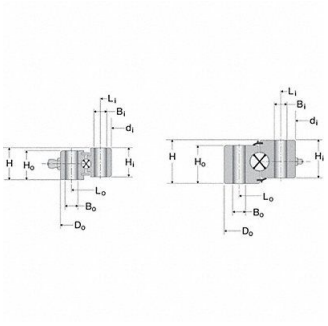

SILVERTHIN BEARING Slewing Ring Brg 1.968 in Bore No Gear, 45TP81

Item **25FDZ16161** Mfr. Model **STO050**

Product Details

Item Reference: **45TP81**	Width (in): **4.331**
Brand: **SILVERTHIN BEARING**	Height (in): **0.787**
Weight (lb): **2**	Harmonization Code: **8482105056**
Length (in): **4.331**	

Product Description

Slewing Ring Bearing Bore Diameter 1.968 in Moment Rating 515 ft-lb Outside Diameter 4.331 in Overall Width 0.787 in Seal Type Non-Contact System of Measurement Inch Gear Type No Gear