sales@murada.co.id
www.murada.co.id

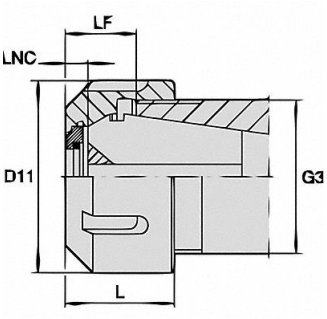

ERICKSON Shrink Fit Tool Holder U3 BT30, 314EU0

Item **16FYA171130** Mfr. Model **LNABER40M**

Product Details

Item Reference: **314EU0**	Width (in): **2.795**
Brand: **ERICKSON**	Height (in): **1.22**
Weight (lb): **0.674**	Harmonization Code: **7318160085**
Length (in): **3.78**	

Product Description

Collet Fastener For Use With ER Coolant-Sealing Disks BT30