sales@murada.co.id
www.murada.co.id

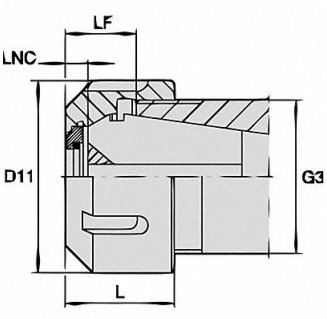

ERICKSON LOCKNUT-COOLANT STYLE, 314ET9

Item **16FYA171129** Mfr. Model **LNABER32M**

Product Details

Item Reference: **314ET9**	Width (in): **1.575**
Brand: **ERICKSON**	Height (in): **1.575**
Weight (lb): **0.368**	Harmonization Code: **7318160030**
Length (in): **3.091**	

Product Description

Collet Fastener For Use With ER Coolant-Sealing Disks CV50