sales@murada.co.id
www.murada.co.id

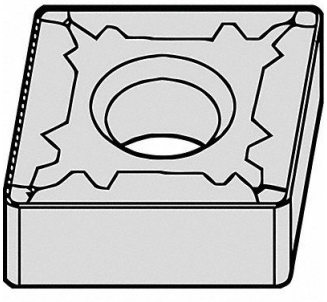

WIDIA GTD Spiral Point Tap #10-32 HSS, 273RE8

Item **16YHF159294** Mfr. Model **16206**

Product Details

Item Reference: **273RE8**	Width (in): **1.04**
Brand: **WIDIA GTD**	Height (in): **3.1**
Weight (lb): **0.07**	Harmonization Code: **8207403000**
Length (in): **2.23**	

Product Description

Spiral Point Tap Thread Size #10-32 UNF Overall Length 2 11/32 in High Speed Steel TiCN Right Hand Thread Length 1/2 in 75 Percent Thread Drill Size #21 Thread Limit H5 Class of Fit H3 Number of Flutes 2