sales@murada.co.id
www.murada.co.id

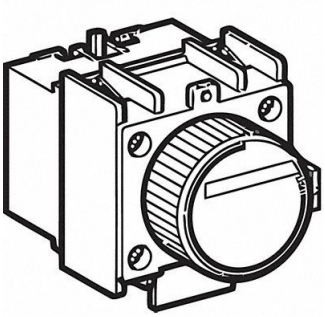

SCHNEIDER ELECTRIC Contactor Time Delay Auxcontact Block, 48N976

Item **04UNP28732** Mfr. Model **LADS2**

Product Details

Item Reference: **48N976**	Width (in): **1**
Brand: **SCHNEIDER ELECTRIC**	Height (in): **1**
Weight (lb): **0.19**	Harmonization Code: **8538908180**
Length (in): **1**	

Product Description

Contactor Time Delay Auxcontact Block