sales@murada.co.id
www.murada.co.id

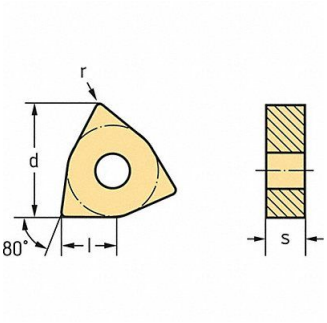

WALTER VALENITE Turning Insert 543 Insert WKK10S Grade, 53VN98

Item **16XLY90170** Mfr. Model **WNMG100612MK5WKK10S**

Product Details

Item Reference: **53VN98**	Width (in): **2.205**
Brand: **WALTER VALENITE**	Height (in): **0.551**
Weight (lb): **0.46**	Harmonization Code: **8209000030**
Length (in): **5.433**	

Product Description

Turning Insert Chip-Breaker Code MK5 Inscribed Circle 5/8 in TiCN+Al2O3+TiCN