sales@murada.co.id
www.murada.co.id

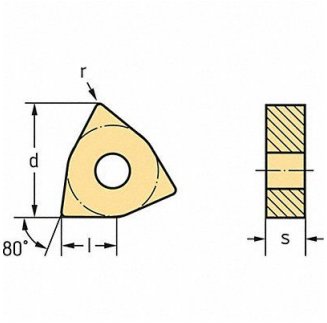

WALTER VALENITE Turning Insert 542 Insert WKK20S Grade, 53VN89

Item **16XLY90166** Mfr. Model **WNMG100608MK5WKK20S**

Product Details

Item Reference: **53VN89**	Width (in): **2.205**
Brand: **WALTER VALENITE**	Height (in): **0.551**
Weight (lb): **0.46**	Harmonization Code: **8209000030**
Length (in): **5.433**	

Product Description

Turning Insert Chip-Breaker Code MK5 Inscribed Circle 5/8 in TiCN+Al2O3+TiCN