sales@murada.co.id
www.murada.co.id

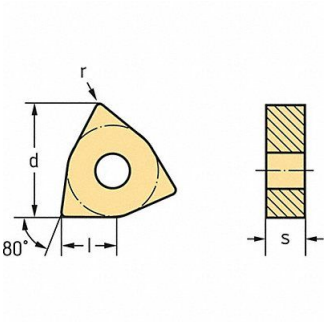

WALTER VALENITE Turning Insert 434 Insert WKK20S Grade, 53VN76

Item **16XLY90159** Mfr. Model **WNMG080416MK5WKK20S**

Product Details

Item Reference: **53VN76**	Width (in): **1.575**
Brand: **WALTER VALENITE**	Height (in): **0.433**
Weight (lb): **0.24**	Harmonization Code: **8209000030**
Length (in): **3.858**	

Product Description

Turning Insert Chip-Breaker Code MK5 Inscribed Circle 1/2 in TiCN+Al2O3+TiCN