sales@murada.co.id
www.murada.co.id

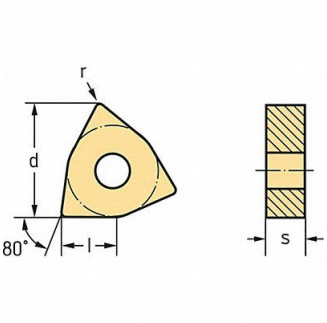

WALTER VALENITE Turning Insert 434 Insert WKK10S Grade, 53VN75

Item **16XLY90158** Mfr. Model **WNMG080416MK5WKK10S**

Product Details

Item Reference: **53VN75**	Width (in): **1.575**
Brand: **WALTER VALENITE**	Height (in): **0.433**
Weight (lb): **0.22**	Harmonization Code: **8209000030**
Length (in): **3.858**	

Product Description

Turning Insert Chip-Breaker Code MK5 Inscribed Circle 1/2 in TiCN+Al2O3+TiCN