sales@murada.co.id
www.murada.co.id

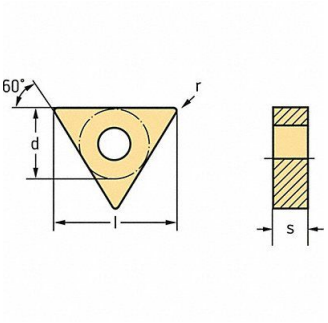

WALTER VALENITE Triangle Turning Insert TNMG Carbide, 53WZ08

Item **16XLY89286** Mfr. Model **TNMG220408MK5WKK10S**

Product Details

Item Reference: **53WZ08**	Width (in): **2.205**
Brand: **WALTER VALENITE**	Height (in): **0.551**
Weight (lb): **0.29**	Harmonization Code: **8209000030**
Length (in): **5.433**	

Product Description

Triangle Turning Insert Chip-Breaker Code MK5 Inscribed Circle 1/2 in TiCN+Al2O3+TiCN