sales@murada.co.id
www.murada.co.id

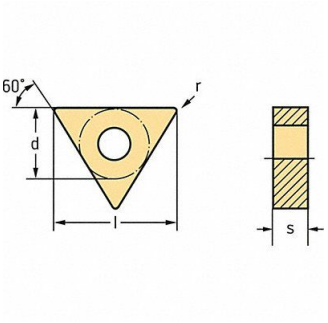

WALTER VALENITE Triangle Turning Insert TNMG Carbide, 53WL49

Item **16XLY89235** Mfr. Model **TNMG160412MK5WKK10S**

Product Details

Item Reference: **53WL49**	Width (in): **1.575**
Brand: **WALTER VALENITE**	Height (in): **0.433**
Weight (lb): **0.15**	Harmonization Code: **8209000030**
Length (in): **3.858**	

Product Description

Triangle Turning Insert Chip-Breaker Code MK5 Inscribed Circle 3/8 in TiCN+Al2O3+TiCN