sales@murada.co.id
www.murada.co.id

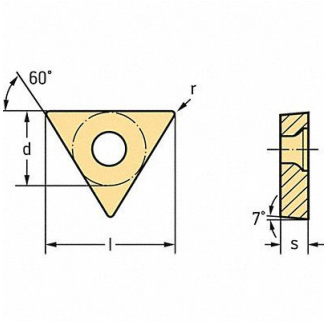

WALTER VALENITE Triangle Turning Insert TCGT Carbide, 53WJ03

Item **16XLY89036** Mfr. Model **TCGT110204MM4WSM01**

Product Details

Item Reference: **53WJ03**	Width (in): **1.575**
Brand: **WALTER VALENITE**	Height (in): **0.433**
Weight (lb): **0.07**	Harmonization Code: **8209000030**
Length (in): **3.858**	

Product Description

Triangle Turning Insert Chip-Breaker Code MM4 Inscribed Circle 1/4 in TiAlN