sales@murada.co.id
www.murada.co.id

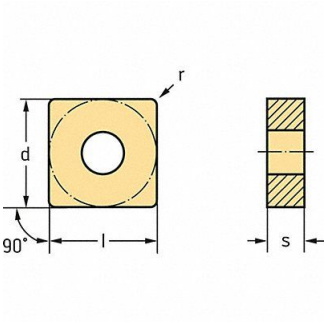

WALTER VALENITE Square Turning Insert SNMG Carbide, 53WG25

Item **16XLY87695** Mfr. Model **SNMG120408MK5WKK10S**

Product Details

Item Reference: **53WG25**	Width (in): **1.575**
Brand: **WALTER VALENITE**	Height (in): **0.433**
Weight (lb): **0.22**	Harmonization Code: **8209000030**
Length (in): **3.858**	

Product Description

Square Turning Insert Chip-Breaker Code MK5 Inscribed Circle 1/2 in TiCN+Al2O3+TiCN