sales@murada.co.id
www.murada.co.id

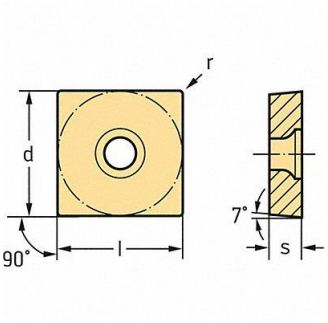

WALTER VALENITE Square Turning Insert SCGT Carbide, 53WE71

Item **16XLY87591** Mfr. Model **SCGT120408MM4WSM01**

Product Details

Item Reference: **53WE71**	Width (in): **1.575**
Brand: **WALTER VALENITE**	Height (in): **0.433**
Weight (lb): **0.22**	Harmonization Code: **8209000030**
Length (in): **3.858**	

Product Description

Square Turning Insert Chip-Breaker Code MM4 Inscribed Circle 1/2 in TiAlN