sales@murada.co.id
www.murada.co.id

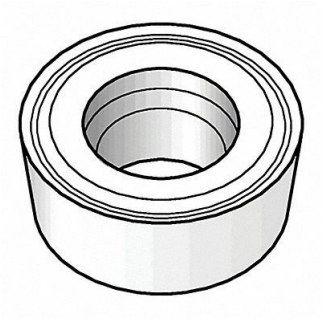

WIDIA TRN Insert POSINSRT GEO STD, 274DW5

Item **16XKY86969** Mfr. Model **RCMX3209M0T**

Product Details

Item Reference: **274DW5**	Width (in): **2.992**
Brand: **WIDIA**	Height (in): **0.709**
Weight (lb): **1**	Harmonization Code: **8209000030**
Length (in): **4.488**	

Product Description

Insert Inscribed Circle 1.2580 in TiN