sales@murada.co.id
www.murada.co.id

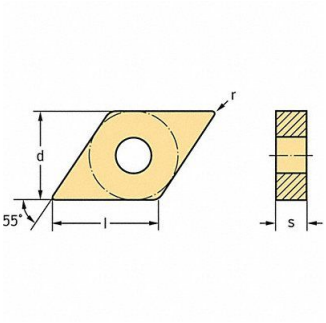

WALTER VALENITE Diamond Turning Insert DNMG Carbide, 53WD38

Item **16XLY86422** Mfr. Model **DNMG150616MP5WPP20S**

Product Details

Item Reference: **53WD38**	Width (in): **2.205**
Brand: **WALTER VALENITE**	Height (in): **0.551**
Weight (lb): **0.33**	Harmonization Code: **8209000030**
Length (in): **5.433**	

Product Description

Diamond Turning Insert Chip-Breaker Code MP5 Inscribed Circle 1/2 in TiCN+Al2O3+TiCN ANSI Code DNMG444-MP5 WPP20S Clearance Angle 0 Degrees