sales@murada.co.id
www.murada.co.id

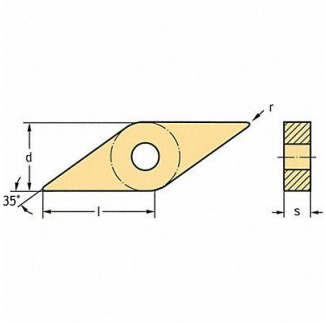

WALTER VALENITE Diamond Turning Insert VNMG Carbide, 53VK25

Item **16XLY86369** Mfr. Model **VNMG160408MK5WKK10S**

Product Details

Item Reference: **53VK25**	Width (in): **2.205**
Brand: **WALTER VALENITE**	Height (in): **0.551**
Weight (lb): **0.22**	Harmonization Code: **8209000030**
Length (in): **5.433**	

Product Description

Diamond Turning Insert Chip-Breaker Code MK5 Inscribed Circle 3/8 in TiCN+Al2O3+TiCN ANSI Code VNMG332-MK5 WKK10S Clearance Angle 0 Degrees