sales@murada.co.id
www.murada.co.id

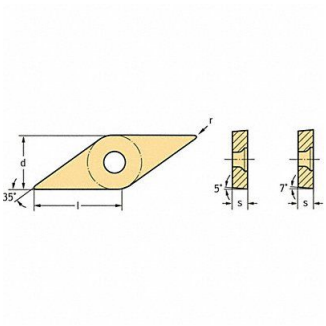

WALTER VALENITE Diamond Turning Insert VCMW Carbide, 53VJ92

Item **16XLY86347** Mfr. Model **VCMW160404RK6WKK20S**

Product Details

Item Reference: **53VJ92**	Width (in): **1.575**
Brand: **WALTER VALENITE**	Height (in): **0.433**
Weight (lb): **0.2**	Harmonization Code: **8209000030**
Length (in): **3.858**	

Product Description

Diamond Turning Insert Chip-Breaker Code RK6 Inscribed Circle 3/8 in TiCN+Al2O3+TiCN ANSI Code VCMW331-RK6 WKK20S Clearance Angle 7 Degrees