sales@murada.co.id
www.murada.co.id

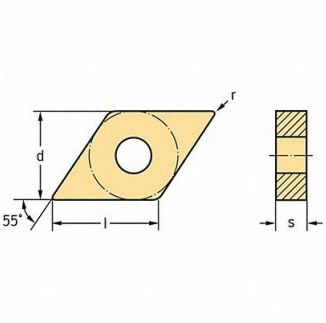

WALTER VALENITE Diamond Turning Insert DNMG Carbide, 53UY62

Item **16XLY86125** Mfr. Model **DNMG110408MP5WPP20S**

Product Details

Item Reference: **53UY62**	Width (in): **1.575**
Brand: **WALTER VALENITE**	Height (in): **0.433**
Weight (lb): **0.13**	Harmonization Code: **8209000030**
Length (in): **3.858**	

Product Description

Diamond Turning Insert Chip-Breaker Code MP5 Inscribed Circle 3/8 in TiCN+Al2O3+TiCN ANSI Code DNMG332-MP5 WPP20S Clearance Angle 0 Degrees