sales@murada.co.id
www.murada.co.id

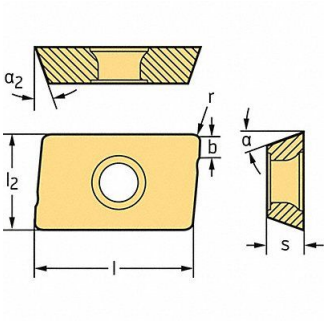

WALTER Milling Insert Parallelogram 17.50mm, 44R693

Item **16JEP78229** Mfr. Model **ADMT160616RF56WKP35S**

Product Details

Item Reference: **44R693**	Width (in): **1.57**
Brand: **WALTER**	Height (in): **0.43**
Weight (lb): **0.22**	Harmonization Code: **8209000030**
Length (in): **3.86**	

Product Description

Parallelogram Milling Insert Inscribed Circle 0.425 in Positive ADMT160616R-F56 WKP35S F56 16 Degrees Chipbreaker Groove 15 Degrees