sales@murada.co.id
www.murada.co.id

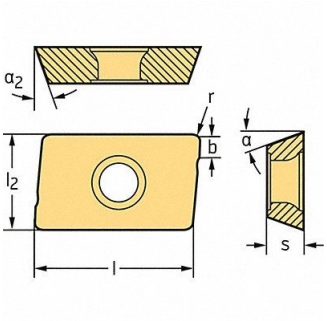


# WALTER Milling Insert Parallelogram 13.60mm, 44R654

Item **16JEP78218** Mfr. Model **ADMT120440RF56WKP35S**

## Product Details

| | |
|---|---|
| Item Reference: **44R654** | Width (in): **1.57** |
| Brand: **WALTER** | Height (in): **0.43** |
| Weight (lb): **0.11** | Harmonization Code: **8209000030** |
| Length (in): **3.86** | |

## Product Description

Parallelogram Milling Insert Inscribed Circle 0.331 in Positive ADMT120440R-F56 WKP35S F56 16 Degrees Chipbreaker Groove 15 Degrees