sales@murada.co.id
www.murada.co.id

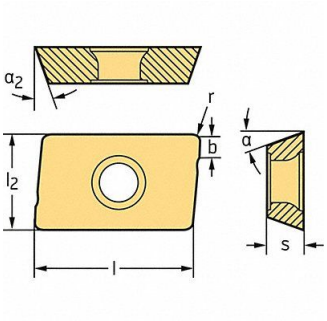

WALTER Milling Insert Parallelogram 13.60mm, 44R601

Item **16JEP78205** Mfr. Model **ADMT120408RF56WKP25S**

Product Details

Item Reference: **44R601**	Width (in): **1.57**
Brand: **WALTER**	Height (in): **0.43**
Weight (lb): **0.11**	Harmonization Code: **8209000030**
Length (in): **3.86**	

Product Description

Parallelogram Milling Insert Inscribed Circle 0.331 in Positive ADMT120408R-F56 WKP25S F56 16 Degrees Chipbreaker Groove 15 Degrees