sales@murada.co.id
www.murada.co.id

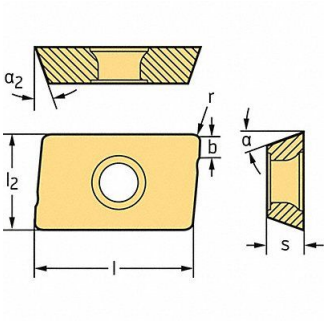

WALTER Milling Insert Parallelogram 11.30mm, 44R539

Item **16JEP78191** Mfr. Model **ADMT10T308RF56WKP35S**

Product Details

Item Reference: **44R539**	Width (in): **0.3**
Brand: **WALTER**	Height (in): **0.2**
Weight (lb): **0.005**	Harmonization Code: **8209000030**
Length (in): **0.5**	

Product Description

Parallelogram Milling Insert Inscribed Circle 0.285 in Positive ADMT10T308R-F56 WKP35S F56 16 Degrees Chipbreaker Groove 15 Degrees