sales@murada.co.id
www.murada.co.id

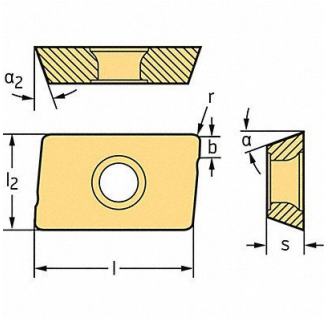

WALTER Milling Insert Parallelogram 13.60mm, 44R416

Item **16JEP78148** Mfr. Model **ADHT120430RG88WXN15**

Product Details

Item Reference: **44R416**	Width (in): **0.3**
Brand: **WALTER**	Height (in): **0.2**
Weight (lb): **0.005**	Harmonization Code: **8209000030**
Length (in): **0.5**	

Product Description

Parallelogram Milling Insert Inscribed Circle 0.331 in Positive ADHT120430R-G88 WXN15 G88 20 Degrees Chipbreaker Groove 15 Degrees