sales@murada.co.id
www.murada.co.id

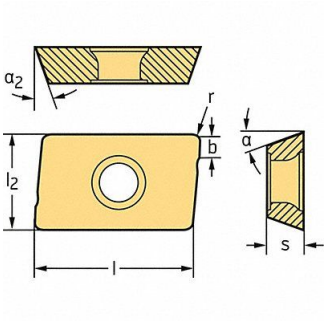


# WALTER Milling Insert Parallelogram 13.60mm, 44R407

Item **16JEP78144** Mfr. Model **ADHT120416RG88WK10**

## Product Details

| | |
|---|---|
| Item Reference: **44R407** | Width (in): **1.57** |
| Brand: **WALTER** | Height (in): **0.43** |
| Weight (lb): **0.11** | Harmonization Code: **8209000030** |
| Length (in): **3.86** | |

## Product Description

Parallelogram Milling Insert Inscribed Circle 0.331 in Positive ADHT120416R-G88 WK10 G88 20 Degrees Chipbreaker Groove 15 Degrees