sales@murada.co.id
www.murada.co.id

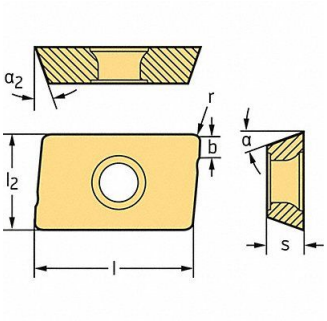


# WALTER Milling Insert Parallelogram 11.30mm, 44R404

Item **16JEP78142** Mfr. Model **ADHT10T3PERG88WXN15**

## Product Details

| | |
|---|---|
| Item Reference: **44R404** | Width (in): **1.57** |
| Brand: **WALTER** | Height (in): **0.43** |
| Weight (lb): **0.04** | Harmonization Code: **8209000030** |
| Length (in): **3.86** | |

## Product Description

Parallelogram Milling Insert Inscribed Circle 0.285 in Positive ADHT10T3PER-G88 WXN15 G88 20 Degrees Chipbreaker Groove 15 Degrees