sales@murada.co.id
www.murada.co.id

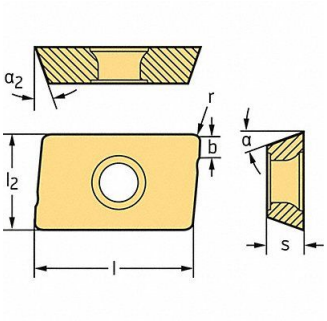

WALTER Milling Insert Parallelogram 11.30mm, 44R403

Item **16JEP78141** Mfr. Model **ADHT10T3PERG88WK10**

Product Details

Item Reference: **44R403**	Width (in): **1.57**
Brand: **WALTER**	Height (in): **0.43**
Weight (lb): **0.04**	Harmonization Code: **8209000030**
Length (in): **3.86**	

Product Description

Parallelogram Milling Insert Inscribed Circle 0.285 in Positive ADHT10T3PER-G88 WK10 G88 20 Degrees Chipbreaker Groove 15 Degrees