sales@murada.co.id
www.murada.co.id

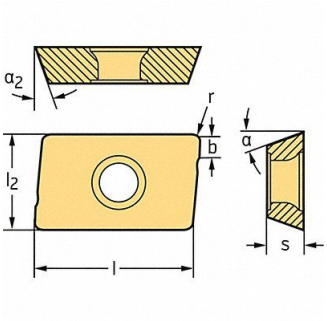

WALTER Milling Insert Parallelogram 9.52mm, 44R399

Item **16JEP78138** Mfr. Model **ADHT0803PELG88WXN15**

Product Details

Item Reference: **44R399**	Width (in): **1.57**
Brand: **WALTER**	Height (in): **0.43**
Weight (lb): **0.07**	Harmonization Code: **8209000030**
Length (in): **3.86**	

Product Description

Parallelogram Milling Insert Inscribed Circle 0.266 in Positive ADHT0803PEL-G88 WXN15 G88 20 Degrees Chipbreaker Groove 15 Degrees