sales@murada.co.id
www.murada.co.id

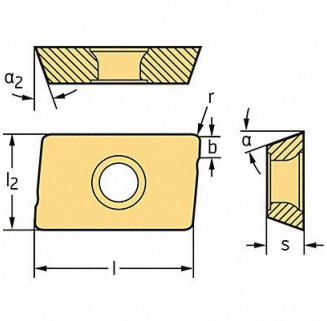

WALTER Milling Insert Parallelogram 19.00mm, 44R395

Item **16JEP78137** Mfr. Model **ADGT1807PERD56WKP35S**

Product Details

Item Reference: **44R395**	Width (in): **2.21**
Brand: **WALTER**	Height (in): **0.51**
Weight (lb): **0.35**	Harmonization Code: **8209000030**
Length (in): **5.43**	

Product Description

Parallelogram Milling Insert Inscribed Circle 0.571 in Positive ADGT1807PER-D56 WKP35S D56 10 Degrees Chipbreaker Groove 15 Degrees