sales@murada.co.id
www.murada.co.id

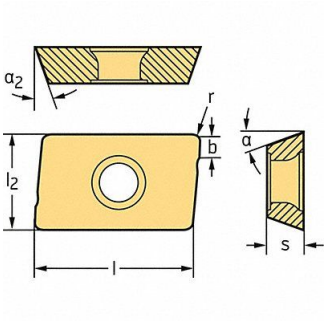

WALTER Milling Insert Parallelogram 17.50mm, 44R370

Item **16JEP78132** Mfr. Model **ADGT1606PERD51WKP35S**

Product Details

Item Reference: **44R370**	Width (in): **1.57**
Brand: **WALTER**	Height (in): **0.43**
Weight (lb): **0.22**	Harmonization Code: **8209000030**
Length (in): **3.86**	

Product Description

Parallelogram Milling Insert Inscribed Circle 0.425 in Positive ADGT1606PER-D51 WKP35S D51 10 Degrees Chipbreaker Groove 15 Degrees