sales@murada.co.id
www.murada.co.id

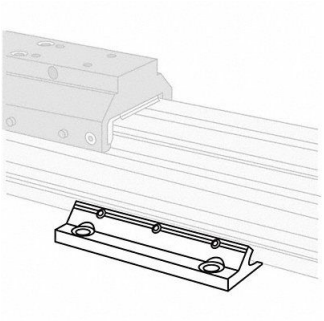

# SPEEDAIRE Mounting Center 2 In, 3FE51

Item **23KDF8663** Mfr. Model **3FE51**

## Product Details

| | |
|---|---|
| Item Reference: **3FE51** | Width (in): **3** |
| Brand: **SPEEDAIRE** | Height (in): **1** |
| Weight (lb): **0.6** | Harmonization Code: **8302416080** |
| Length (in): **5.5** | |

## Product Description

Center Mounting Kits with Hardware Bore Dia (In.) 2 in