sales@murada.co.id
www.murada.co.id

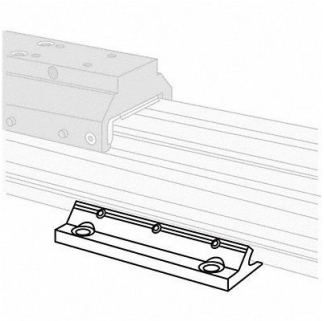

SPEEDAIRE Mounting Center 1 In, 3FE48

Item **23KDF8660** Mfr. Model **3FE48**

Product Details

Item Reference: **3FE48**	Width (in): **2.5**
Brand: **SPEEDAIRE**	Height (in): **0.8**
Weight (lb): **0.15**	Harmonization Code: **8302416080**
Length (in): **4**	

Product Description

Center Mounting Kits with Hardware Bore Dia (In.) 1 in