sales@murada.co.id
www.murada.co.id

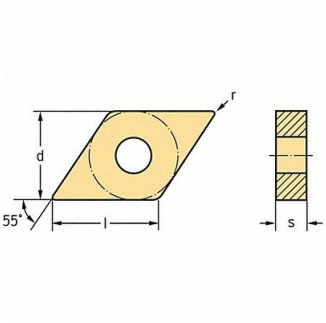

WALTER VALENITE Diamond Turning Insert DNMA Carbide, 53UY27

Item **16XLY86097** Mfr. Model **DNMA150608RK7WKK20S**

Product Details

Item Reference: **53UY27**	Width (in): **2.205**
Brand: **WALTER VALENITE**	Height (in): **0.551**
Weight (lb): **0.37**	Harmonization Code: **8209000030**
Length (in): **5.433**	

Product Description

Diamond Turning Insert Chip-Breaker Code RK7 Inscribed Circle 1/2 in TiCN+Al2O3+TiCN ANSI Code DNMA442-RK7 WKK20S Clearance Angle 0 Degrees