sales@murada.co.id
www.murada.co.id

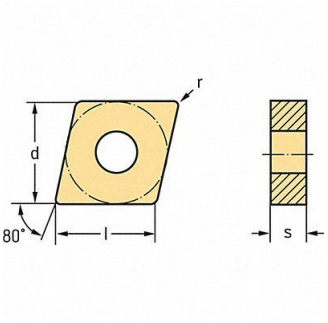

WALTER VALENITE Diamond Turning Insert CNMG Carbide, 53UU39

Item **16XLY85798** Mfr. Model **CNMG160612MK5WKK20S**

Product Details

Item Reference: **53UU39**	Width (in): **0.8**
Brand: **WALTER VALENITE**	Height (in): **0.3**
Weight (lb): **0.045**	Harmonization Code: **8209000030**
Length (in): **1**	

Product Description

Diamond Turning Insert Chip-Breaker Code MK5 Inscribed Circle 5/8 in TiCN+Al2O3+TiCN ANSI Code CNMG543-MK5 WKK20S Clearance Angle 0 Degrees