sales@murada.co.id
www.murada.co.id

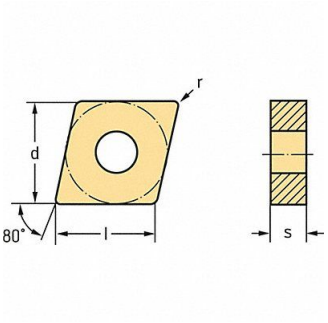

WALTER VALENITE Diamond Turning Insert CNMG Carbide, 53UU38

Item **16XLY85797** Mfr. Model **CNMG160612MK5WKK10S**

Product Details

Item Reference: **53UU38**	Width (in): **2.205**
Brand: **WALTER VALENITE**	Height (in): **0.551**
Weight (lb): **0.6**	Harmonization Code: **8209000030**
Length (in): **5.433**	

Product Description

Diamond Turning Insert Chip-Breaker Code MK5 Inscribed Circle 5/8 in TiCN+Al2O3+TiCN ANSI Code CNMG543-MK5 WKK10S Clearance Angle 0 Degrees