sales@murada.co.id
www.murada.co.id

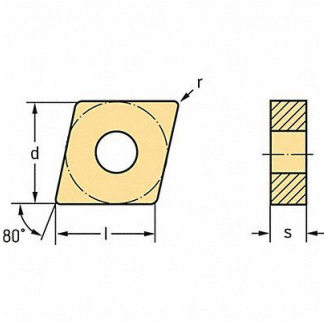

WALTER VALENITE Diamond Turning Insert CNMG Carbide, 53UT54

Item **16XLY85742** Mfr. Model **CNMG120408MK5WKK10S**

Product Details

Item Reference: **53UT54**	Width (in): **1.575**
Brand: **WALTER VALENITE**	Height (in): **0.433**
Weight (lb): **0.22**	Harmonization Code: **8209000030**
Length (in): **3.858**	

Product Description

Diamond Turning Insert Chip-Breaker Code MK5 Inscribed Circle 1/2 in TiCN+Al2O3+TiCN ANSI Code CNMG432-MK5 WKK10S Clearance Angle 0 Degrees