sales@murada.co.id
www.murada.co.id

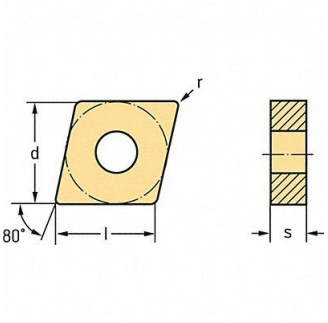

WALTER VALENITE Diamond Turning Insert CNMG Carbide, 53UT38

Item **16XLY85733** Mfr. Model **CNMG090308MK5WKK10S**

Product Details

Item Reference: **53UT38**	Width (in): **1.575**
Brand: **WALTER VALENITE**	Height (in): **0.433**
Weight (lb): **0.07**	Harmonization Code: **8209000030**
Length (in): **3.858**	

Product Description

Diamond Turning Insert Chip-Breaker Code MK5 Inscribed Circle 3/8 in TiCN+Al2O3+TiCN ANSI Code CNMG322-MK5 WKK10S Clearance Angle 0 Degrees