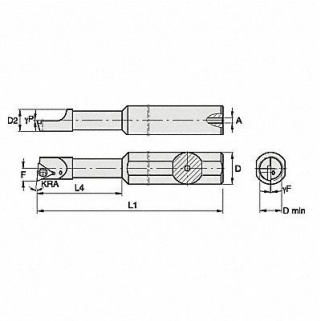


# WIDIA Indexable Boring Bar 7/16 HSS, 287CC9

Item **16XKY65241** Mfr. Model **QSBI37562511255R**

## Product Details

| | |
|---|---|
| Item Reference: **287CC9** | Width (in): **0.787** |
| Brand: **WIDIA** | Height (in): **0.787** |
| Weight (lb): **0.26** | Harmonization Code: **8207803000** |
| Length (in): **1.969** | Country of Origin: **United States** |

## Product Description

Indexable Boring Bar Insert Shape Triangle Overall Length 4-1/2 in QSBI37562511255R 95 Degrees 0.2210 in T9 Insert Screw Coolant Through Turning Right Hand