sales@murada.co.id
www.murada.co.id

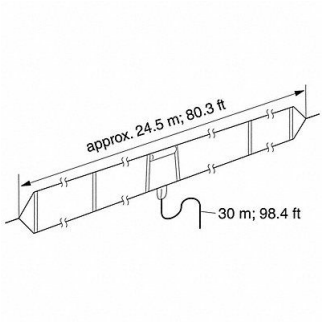

ICOM Antenna Tuner 13-9/16 L x 9-3/4 W, 492D70

Item **31XTH16942** Mfr. Model **AH710**

Product Details

Item Reference: **492D70**	Width (in): **9.8**
Brand: **ICOM**	Height (in): **5.2**
Weight (lb): **13.45**	Harmonization Code: **8529104040**
Length (in): **21**	

Product Description

Antenna Tuner Portable Material Aluminum Length (In.) 13 5/8 in Width (In.) 9 3/4 in Height (In.) 5 in For Use With 718 7300 7610 78 M700PRO Mfr No M802 R8600