sales@murada.co.id
www.murada.co.id

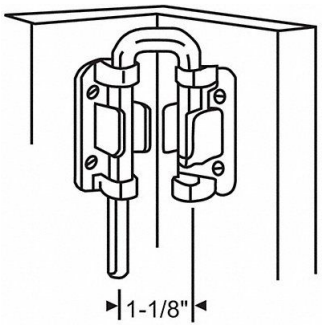

GRAINGER APPROVED Security Latch 3-53/64 L x 19/32 H, 451H76

Item **31NVR16762** Mfr. Model **16185**

Product Details

Item Reference: **451H76**	Width (in): **2.9**
Brand: **GRAINGER APPROVED**	Height (in): **0.8**
Weight (lb): **0.28**	Harmonization Code: **3925200091**
Length (in): **4.1**	

Product Description

Door Security Latch Latch Unfinished Finish For Door Thickness (in) 1 to 1-1/4 For Use With Slide Swing Door Hardware Not Included Height 19/32 in Length 3-53/64 in Material Zinc Operation Type Manual Width 2-1/8 in