sales@murada.co.id
www.murada.co.id

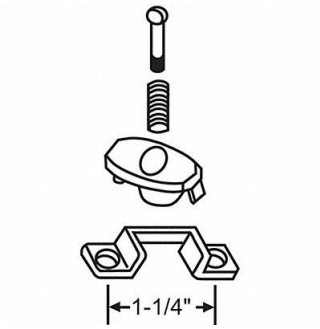

GRAINGER APPROVED Door Latch 3 L x 1/2 H, 451H58

Item **31NVR16760** Mfr. Model **1451**

Product Details

Item Reference: **451H58**	Width (in): **1.5**
Brand: **GRAINGER APPROVED**	Height (in): **0.7**
Weight (lb): **0.04**	Harmonization Code: **3925200091**
Length (in): **2.2**	

Product Description

Door Latch Latch Unfinished Finish For Door Thickness (in) 1 to 1-1/4 For Use With Patio Screen Door Hardware Not Included Height 1/2 in Length 3 in Material Zinc Operation Type Manual Width 3 in