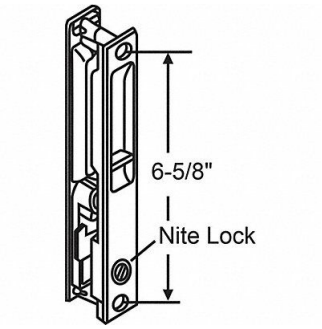

GRAINGER APPROVED Door Handle 7-21/64 L x 1-1/8 H, 451H52

Item **31NVR16759** Mfr. Model **13140**

Product Details

Item Reference: **451H52**	Width (in): **3.3**
Brand: **GRAINGER APPROVED**	Height (in): **1**
Weight (lb): **0.515**	Harmonization Code: **3925200091**
Length (in): **7.2**	

Product Description

Door Handle Handle Unfinished Finish For Door Thickness (in) 1 to 1-1/4 For Use With Glass Sliding Door Hardware Not Included Height 1-1/8 in Length 7-21/64 in Material Zinc Operation Type Manual Width 29/32 in