sales@murada.co.id
www.murada.co.id

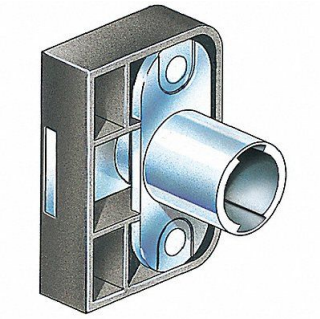

COMPX TIMBERLINE Remov Core Plug Dead Bolt Locks Blk Sq, 5ELE8

Item **31SED16236** Mfr. Model **C290CB**

Product Details

Item Reference: **5ELE8**	Width (in): **2.5**
Brand: **COMPX TIMBERLINE**	Height (in): **1.5**
Weight (lb): **0.05**	Harmonization Code: **8301300060**
Length (in): **2.5**	

Product Description

Lock Style Cabinet Lock Type Dead Bolt